嘉尼企業股份有限公司 CANAL ELECTRONIC CO.,LTD.

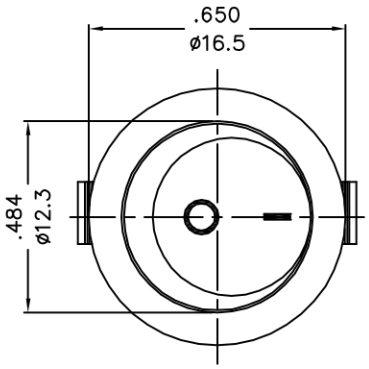

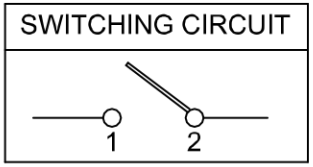

ON-OFF

ROCKER SWITCH MODEL MR5 SERIES

RATING:3A 250VAC (UL/CUL)
6A 125VAC (UL/CUL)
3A 250V~ μT100/55(VDE/ENEC/CQC)
DIELECTRIC VOLTAGE-WITHSTAND:1,000VAC FOR 1 MINUTE
INSULATION RESISTANCE:DC 500V 100M Ω (MIN.)
CONTACT RESISTANCE:20mΩ INITIAL (MAX.)

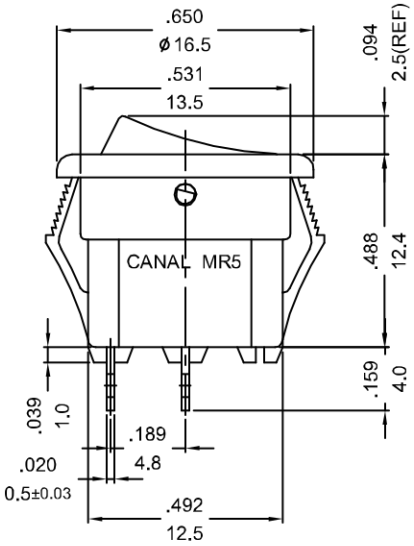

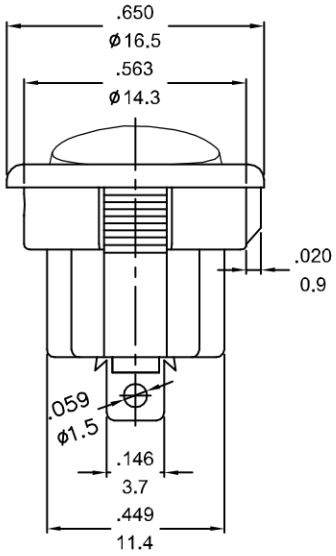

PANEL CUTOUT DIMENSION

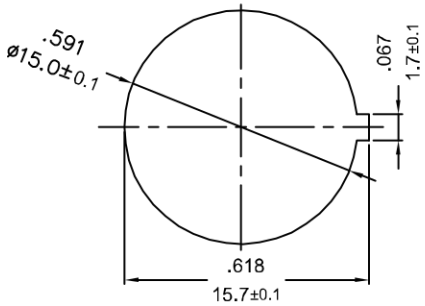

X=(1.0~2.0mm) / PANEL THICKNESS

NOTE: TOLERANCES UNLESS OTHERWISE SPECIFIED:±.012/0.3(in/min)

REVISION	DESCRIPTION	REVISED BY	TOLERANCES				ANGLE ½°	UNIT	mm	PART NAME	MR5 SPEC DRAWING	DWG NO
4			DRAWN BY	向 宏	DESIGNED BY	馮紅崗	SCALE	2/1				S4494B
3												
2 2015.07.10	修改品名，重新出圖	周 平	CHECKED BY		APPROVED BY		DATE	2011.11.23		PART NO	MR5-110-R5N-***C-3 2	
1 2011.11.23	首次出圖	向 宏										