嘉尼企業股份有限公司 CANAL ELECTRONIC CO.,LTD.

嘉尼企業股份有限公司 研發部
2006.01.02
發圖章

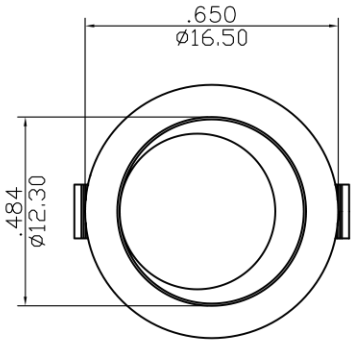

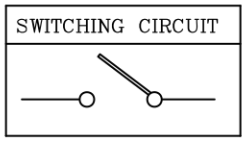

ON-OFF

ROCKER SWITCH MODEL MR5 SERIES
RATING: 3A 250VAC (UL, CUL)
6A 125VAC (UL, CUL)
3A 250VAC~μT100 (VDE)
DIELECTRIC VOLTAGE-WITHSTAND: 1,000VAC FOR 1 MINUTE
INSULATION RESISTANCE: DC 500V 100MΩ (MIN.)
CONTACT RESISTANCE: 20mΩ INITIAL (MAX.)
OPERATION: 400±100 GRAM.

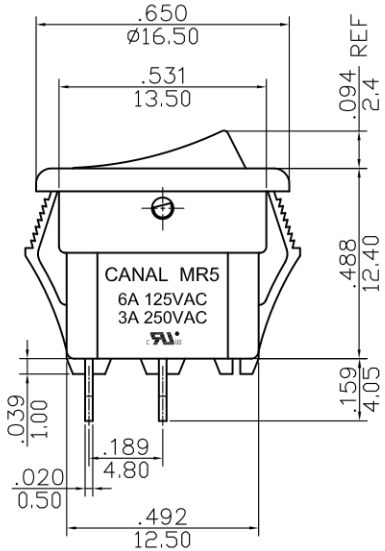

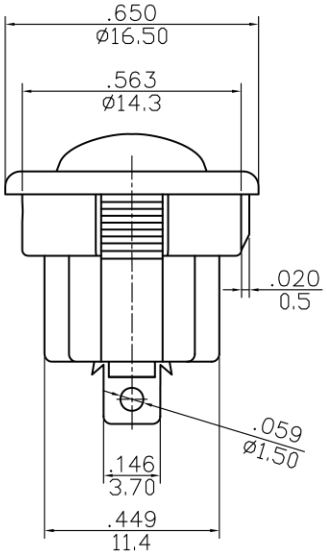

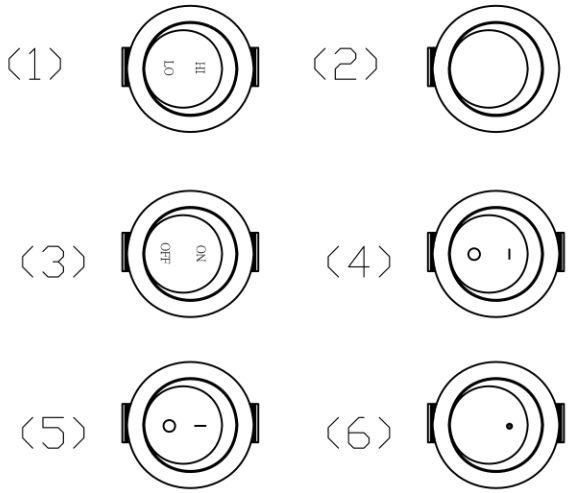

SCALE:1:1

PANEL CUTOUT DIMENSION

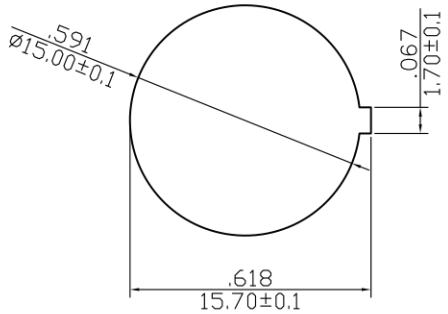

X=(1.0~2.0mm)
PANEL THICKNESS

NOTE: 1. TOLERANCES UNLESS OTHERWISE SPECIFIED: $\pm \frac{0.02}{0.3}$ (in/mm)
2. IT IS IN ACCORD WITH CANAL SPECIFICATION: WI-QA-24

REVISION	DESCRIPION	REVISED BY	TOLEANCES .X ± .XX ± ANGLE ½°					UNIT mm	PART NAME	MR5 SPEC DRAWING	DWG NO
△			DRAWN BY	蔡劍	DESIGNED BY	蔡劍	SCALE	2/1			S0988A
△			CHECKED BY		APPROVED BY		DATE	2005.08.08	PART NO	MR5-110-R*N-****	
△ 2005.10.27	首次出圖.	蔡劍									